> Features:

Features:

Slim and compact size

1 pole 12A; 2 pole 8A

With LED integrated in relay

With lockable test button and inspection window

Conformity with RoHS directive

Conform to IEC61810-1

Sockets selection table

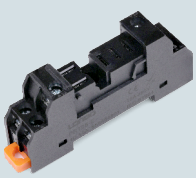

PRT05-E

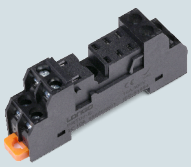

PRT08-E

PRU05-E

PRU08-E

PRT05-ST

PRT08-ST

Relay

JQX-14FT- □–□□

Coil Voltage
3~110VDC
6~220VAC
Special options

D: Diode
L:LED
T:Test button

Contact form
1,2(A:normally open,B:normally close, C:changeover)

Series Name

Socket

Relay module

Specification

Contact	Contact form		1A,1B,1C	2A,2B,2C
	Rated load	Resistive (AC-1)	12A/250VAC,30VDC	8A/250VAC,30VDC
		Motor (AC-15)	1/3HP,240VAC;1/2HP,240VAC	1/6HP,240VAC
	Operating power(Resistive)		2500VA,300W;4000VA,480W	1250VA,150W;2000VA,240W
	Contact resistance(Initial)		≤50mΩ	
	Material		Ag alloy	
	Electrical endurance		⩾10^5cycles(1800 Ops/h)	
	Mechanical endurance		⩾10^7cycles(18000 Ops/h)	
Pick-up voltage (23℃)			DC:⩽75%Rated voltage,AC:⩽80%Rated voltage	
Drop-out voltage (23℃)			DC:⩾10%Rated voltage,AC:⩾30%Rated voltage	
Max.Allowed voltage((25℃)			110%Rated voltage	
Insulation resistance			⩾1000MΩ(500VDC)	
Coil power consumption	DC(W)		0.53	
	AC(VA)		1.0	
Operate time(at nominal voltage)			⩽20ms	
Release time(at nominal voltage)			⩽10ms	
Initial dielectric strength	Between contacts		1000VAC/1min (Leakage current 1 mA)	
	Between poles		1000VAC/1min (Leakage current 1 mA)	
	Between contact and coil		5000VAC/1min (Leakage current 1 mA)	
Ambient temperature			-40~+65℃	
Humidity			35%~85%RH	
Atmospheric Pressure			86~106KPa	
Shock resistance			10G(Half a wave of pulses of sine:11ms)	
Vibration resistance			10~55Hz Dual amplitude:1.5mm	
Installation mode			Plug-in terminals	
Weight			Approx.17g	
Matched relay socket			PRU05-E PRT05-E PRT05-ST	PRU08-E PRT08-E PRT08-ST
Equivalent Product	OMRON		G2R-1-SNI	G2R-2-SNI
	Schneider		RXG12	RXG22
	Finder		46.61	46.52

Coil Specifications (23°C)

Rated voltage V.DC	3	5	6	9	12	18	24	36	48	110
Coil resistance (±10%)	17	47	68	150	270	610	1100	2440	4300	22800
Rated voltage V.AC	6	12	24	48	115	230				
Coil resistance (±10%)	16	63	240	1085	6300	23000				

Contact Specification

JQX-14FT-1C Electrical durability contacts (resistive load)

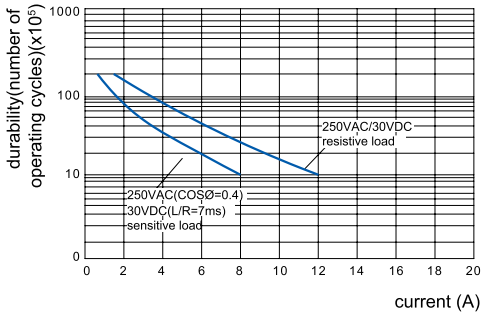

Maximum switching capacity on resistive load

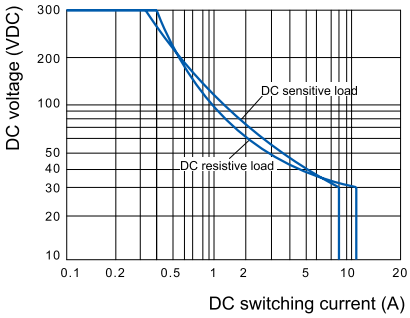

JQX-14FT-2C Electrical durability contacts (resistive load)

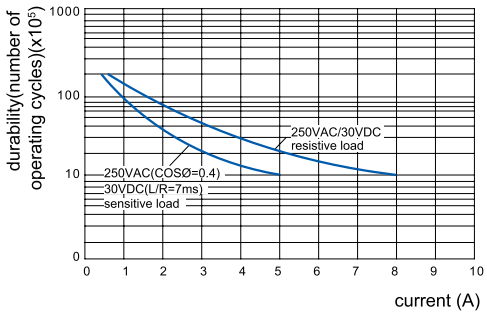

Maximum switching capacity on resistive load

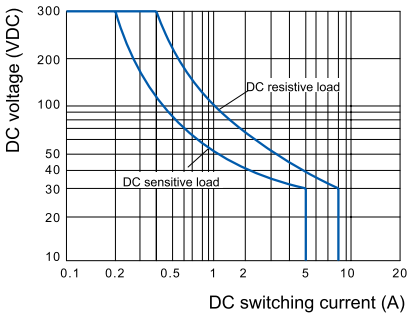

Dimensions (mm)

JQX-14FT-1C

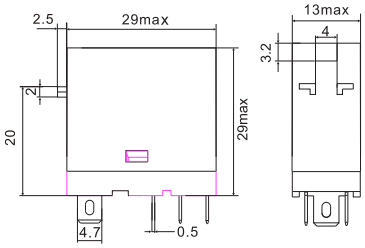

JQX-14FT-2C

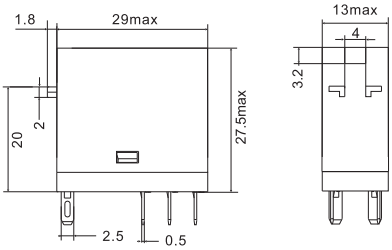

Wiring Diagrams

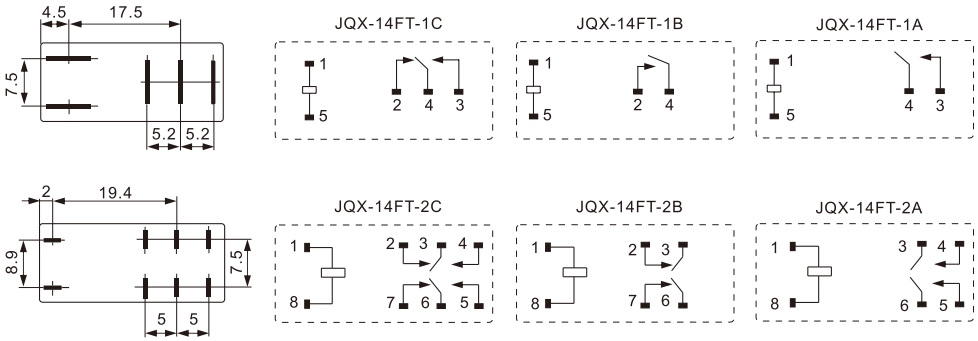

Selection manual of industrial control relay

PRT05/08-A

14FT Socket

Characteristics

PRT05-A

PRT08-A

Type			PRT05-A	PRT08-A
Nominal load	Current	A	12	8
	Voltage	V	250	
Dielectric strength	Between coil and contact	V/min	4000	
	Between contacts	V/min	2500	
Max. tightening torque		Nm	1.0	
Wire size		AWG/mm 2	20-14/0.5-2.5	
Ambient temperature		℃	-35~70	
Unit weight		g	23	28

Relay,accessories Selection Table

Plastic clip	Bus jumper
	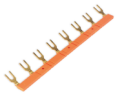
(included in socket)	PR08C

Dimensions (mm)

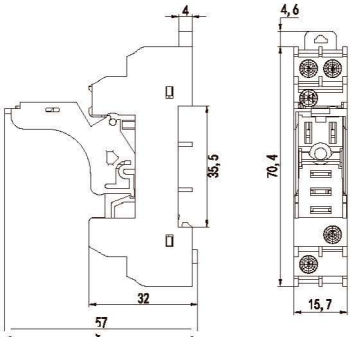

PRT05-A

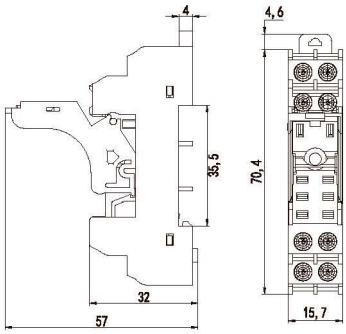

PRT08-A

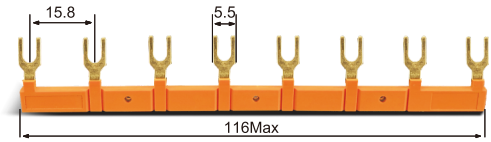

Bus jumper PR08C

Connection Diagrams

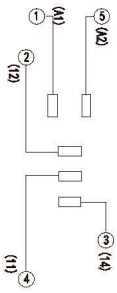

PRT05-A

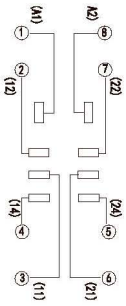

PRT08-A

Selection manual of industrial control relay

PRT05/08-E

14FT Socket

Characteristics

PRT05-E

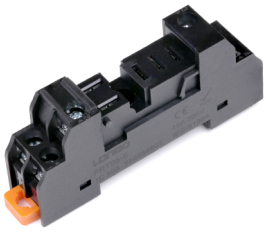

PRT08-E

Type			PRT05-E	PRT08-E
Nominal load	Current	A	12	8
	Voltage	V	250	
Dielectric strength	Between coil and contact	V/min	4000	
	Between contacts	V/min	2500	
Max. tightening torque		Nm	1.0	
Wire size		AWG/mm 2	20-14/0.5-2.5	
Ambient temperature		℃	-35~70	
Unit weight		g	23	28

Relay,accessories Selection Table

Socket	Plastic clip	Bus jumper
PRT05-E		
PRT08-E	PR20L (included in socket)	PR08C

Dimensions (mm)

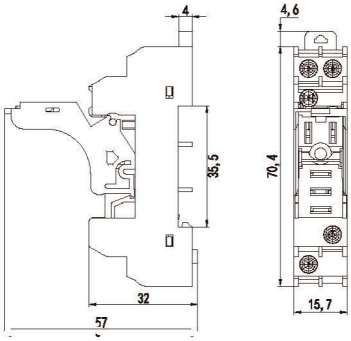

PRT05-E

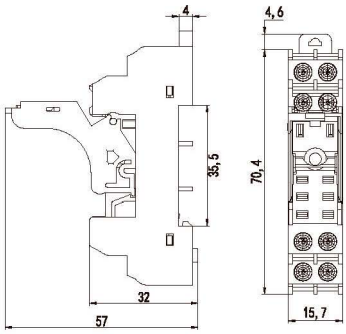

PRT08-E

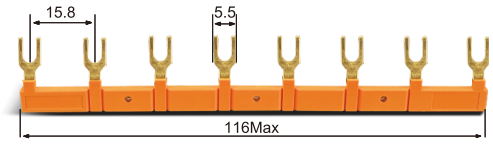

Bus jumper PR08C

Connection Diagrams

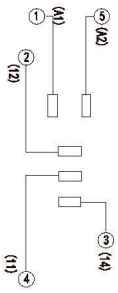

PRT05-E

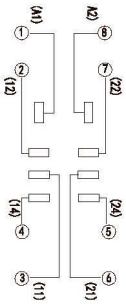

PRT08-E

Selection manual of industrial control relay

PRT05/08-P

14FT Socket

Characteristics

PRT05-P

PRT08-P

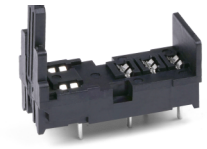

Type			PRT05-P	PRT08-P
Nominal load	Current	A	8	10
	Voltage	V	300	
Dielectric strength	Between coil and contact	V/min	4000	
	Between contacts	V/min	2500	
Ambient temperature		℃	-40~+85	
Unit weight		g	4	

Dimensions (mm)

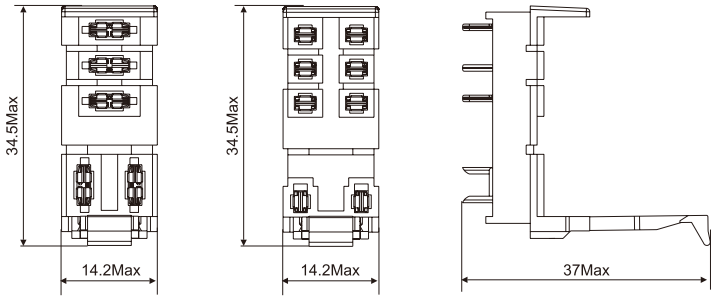

PRT05-P PRT08-P

Connection Diagrams

①⑤ : A1 A2
② : NC
③ : NO
④ : COM

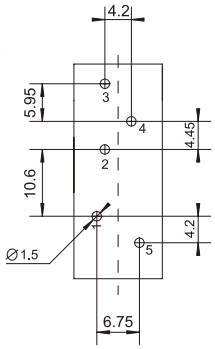

PRT05-P
Bottom view

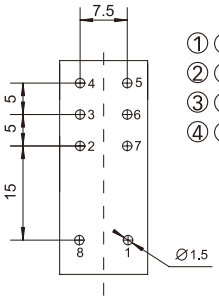

PRT08-P
Bottom view

①⑧ : A1 A2
②⑦ : NC
③⑥ : COM
④⑤ : NO

Selection manual of industrial control relay

PRT05/08-ST

14FT Socket

Characteristics

PRT05-ST

PRT08-ST

Type			PRT05-ST	PRT08-ST
Nominal load	Current	A	12	8
	Voltage	V	250	
Dielectric strength	Between coil and contact	V/min	4000	
	Between contacts	V/min	2500	
Max. tightening torque		Nm	-	
Wire size		AWG/mm ^{2}	20-14/0.5-2.5	
Ambient temperature		℃	-40~+85	
Unit weight		g	35	43

Relay,accessories Selection Table

Socket	Plastic clip	ID tag	Module	Bus jumper
PRT05-ST PRT08-ST	 PR20T	 PR2P	 AMD	 PT01CC

Dimensions (mm)

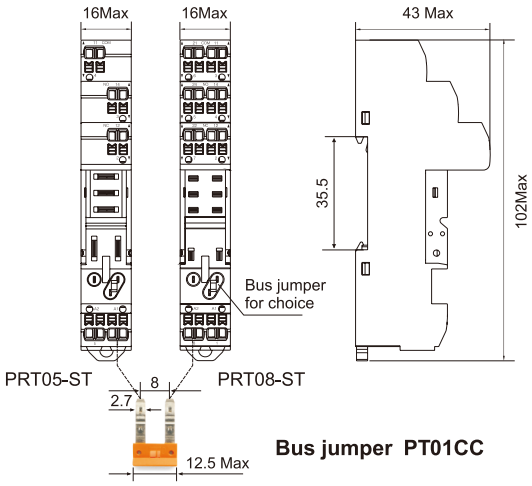

Bus jumper PT01CC

Connection Diagrams

①⑤ : A1 A2
② : NC
③ : NO
④ : COM

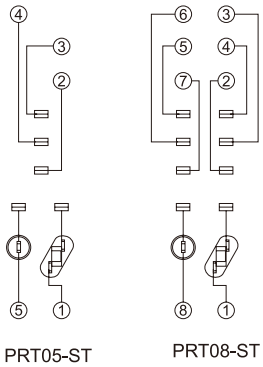

①⑧ : A1 A2
②⑦ : NC
④⑤ : NO
③⑥ : COM

Selection manual of industrial control relay

PRU05/08-E

14FT Socket

Characteristics

PRU05-E

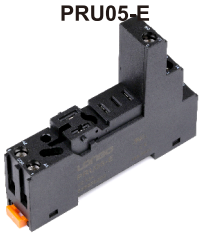

PRU08-E

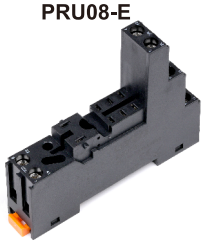

Type			PRU05-E	PRU08-E
Nominal load	Current	A	16	10
	Voltage	V	300	
Dielectric strength	Between coil and contact	V/min	4000	
	Between contacts	V/min	2500	
Max. tightening torque		Nm	1.0	
Wire size		AWG/mm 2	20-14/0.5-2.5	
Ambient temperature		℃	-40~+85	
Unit weight		g	35	43

Relay,accessories Selection Table

Socket	Plastic clip	ID tag	Module	Bus jumper
PRU05-E				
PRU08-E	PR20T	PR2P	AMD	PR08B

Dimensions (mm)

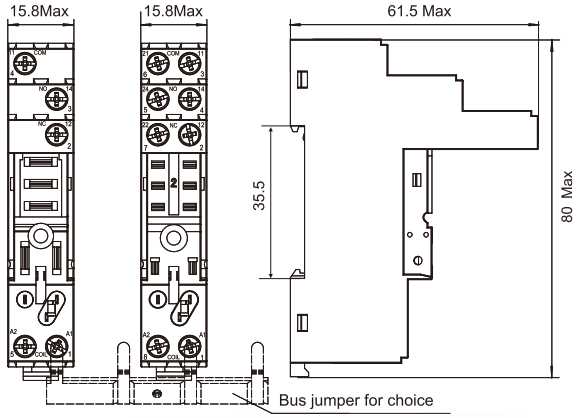

PRU05-E PRU08-E

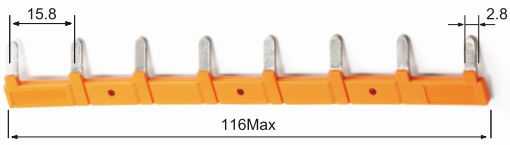

Bus jumper SR08B

Connection Diagrams

①⑤ : A1 A2
② : NC
③ : NO
④ : COM

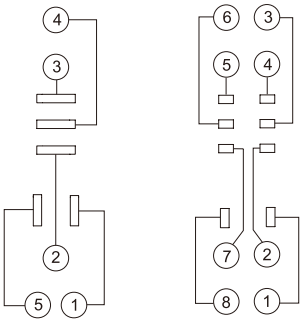

①⑧ : A1 A2
②⑦ : NC
④⑤ : NO
③⑥ : COM

PRU05-E PRU08-E